QUICK FIT INSULATED COPPER PIPE CLAMP

PRESSGUARD®

CPC010N1~CPC050N1

CPC065N1 TO CPC150N1

CPC200N1 and above

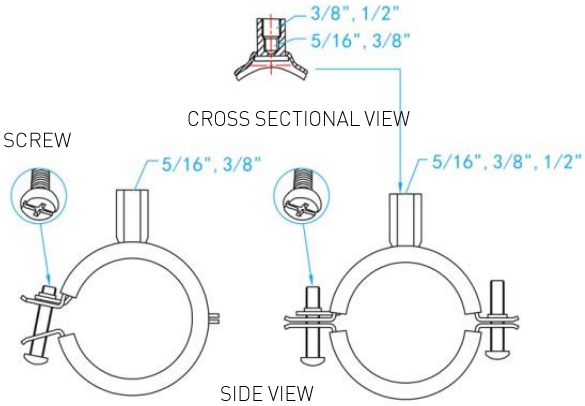

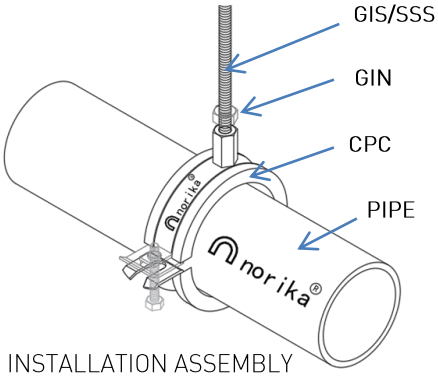

INSTALLATION ASSEMBLY

STANDARD SPECIFICATIONS	
Materials	ST W22 DIN 1614/1016
Finish	Bright Zinc Plated
Connection	5/16" & 3/8" & 1/2" [Projection Welded]
Screw	M8-DIN933-8.8
Acoustic Insulation	26dB [EMPA Nr 179143]
Type Of Rubber	EPDM, 53 Shore ,5mm thick

STANDARD SPECIFICATIONS			APPLICABLE PIPE SIZE										PACKING			
A	B	C	D	E	F	G	H	I	J	K	L	M	N	O	P	Q
SKU	OD RANGE (mm)	CONNECTION	VP/VU (mm)	SS213 (mm)	SS141 (mm)	SCH80 (mm)	COPPER S/STEEL (mm)	HUBLESS CAST IRON (mm)	GI GRADE B (mm)	PPR (mm)	PEX (mm)	WEIGHT (kg)	CTN (NOS)	PALLET (NOS)	20GP (PALLET)	40HQ (PALLET)
CPC010N1	15-18	5/16" & 3/8"	13	-	-	-	15	-	-	-	16	0.048	300	12,600	28	56
CPC015N1	20-23	5/16" & 3/8"	15	-	15	15	20	-	15	20	20	0.054	250	10,500	28	56
CPC020N1	25-29	5/16" & 3/8"	20	-	20	20	25	-	20	25	25	0.060	250	9,000	28	56
CPC025N1	31-36	5/16" & 3/8"	25	35	25	25	35	-	25	32	32	0.065	200	7,200	28	56
CPC035N1	37-43	5/16" & 3/8"	35	42	35	35	42	-	35	40	40	0.073	150	6,300	28	56
CPC042N1	47-54	5/16" & 3/8"	42	-	42	42	50	-	42	50	50	0.083	100	5,400	28	56
CPC050N1	55-63	5/16" & 3/8"	50	50	50	50	50	50	50	63	63	0.124	100	4,200	28	56
CPC065N1	66-77	5/16" & 3/8"	65	65	65	65	65/80	-	65	75	75	0.140	100	3,000	28	56
CPC080N1	82-90	5/16" & 3/8" 3/8" & 1/2"	80	80	80	80	-	80	80	90	-	0.157	50	2,100	28	56
CPC100N1	108-115	3/8" & 1/2"	100	100	100	100	100	100	100	110	-	0.285	50	1,200	28	56
CPC125N1	139-142	3/8" & 1/2"	125	-	125	125	-	-	125	-	-	0.336	25	900	28	56
CPC150N1	159-169	3/8" & 1/2"	150	150	150	150	150	150	150	-	-	0.380	20	720	28	56
CPC200N1	215-220	3/8" & 1/2"	200	-	-	-	-	200	-	-	-	0.475	20	480	28	56
CPC250N1	267-277	3/8" & 1/2	-	-	-	-	-	250	-	-	-	0.576	20	-	-	-
CPC300N1	311-321	3/8" & 1/2	-	-	-	-	-	300	-	-	-	0.648	15	-	-	-

Copyright. All Rights Reserve. Norika®
Norika is constantly seeking product improvements. Therefore, its products are subject to change if deemed necessary.